Features

- 15.6" Industrial Compact Size Panel PC
- Intel Celeron J6412 Processor
- Support 1 x DDR4 3200MHz SO-DIMM, Up to 32GB
- IP66 Compliant Aluminum Front Bezel
- Support Resistive touch screen and Projected Capacitive Multi-touch screen
- Support Auto-Dimming (for option)
- Support High Brightness LCD Version
- Fanless Design
- DC 9~36V Wide Range Power Input

Specifications

System	
CPU	Intel Celeron J6412 Quad Core Processor, 4C/4T, 2.00GHz, TDP is 10W
System Chipset	SoC
Memory	1 x DDR4 3200MHz SO-DIMM, up to 32GB
BIOS	AMI UEFI

I/O Port	
USB	2 x USB 3.2 Type A, 2 x USB 2.0 Type A
Serial / Parallel	1 x DB9 RS-485/422/232 (COM1, BIOS selection, RS-232 is default) 1 x DB9 Type RS-232
Audio	1 x Line-out
Display	1 x DisplayPort 1.4: Up to 4096 x 2160@60Hz
LAN	1 x RJ45 Type Intel I210AT 1GbE LAN 1 x RJ45 Type Intel I225LM/I226LM 2.5GbE LAN
Power	1 x Terminal Block Type, 9-36V DC Power input

Storage Space	
HDD/SSD	1 x M.2 M-Key 2242/2280 for SSD (SATA3)

Expansion	
Expansion slot	1 x Mini-PCIe slot (full size, PCIe3.0 x1, USB2.0), with 1 x micro SIM slot 1 x M.2 E-Key 2230 for WiFi/BT module (USB2.0, PCIe3.0x1)

Storage Space	
TPM	Onboard TPM2.0 SPI I/F TPM IC
Watchdog Timer	1~255 sec (system)
Wake on LAN	Support WOL

Dispalay	Standard	High Brightness by SKU
Display Type	15.6" TFT-LCD	15.6" TFT-LCD
Max. Resolution	1920 x 1080	1920 x 1080
Max. Color	16.7M	16.7M
Luminance (cd/m^2)	500	1,000
View Angle	178(H)/178(V)	170(H)/170(V)
Contrast	1,000:1	1,000:1
Backlight Lifetime	50,000 hrs	50,000 hrs

Touch Screen	
Type	Resistive Touch (for BR Model) Projected Capacitive Touch (for BP Model)
Interface	USB
Light Transmission(%)	Resistive Touch: 80% / Projected Capacitive Touch: 90%

Power	
Power Input	DC 9~36V
Power Consumption	ARCHMI-S-816BP/R: 60.48(Max)

Dimensions

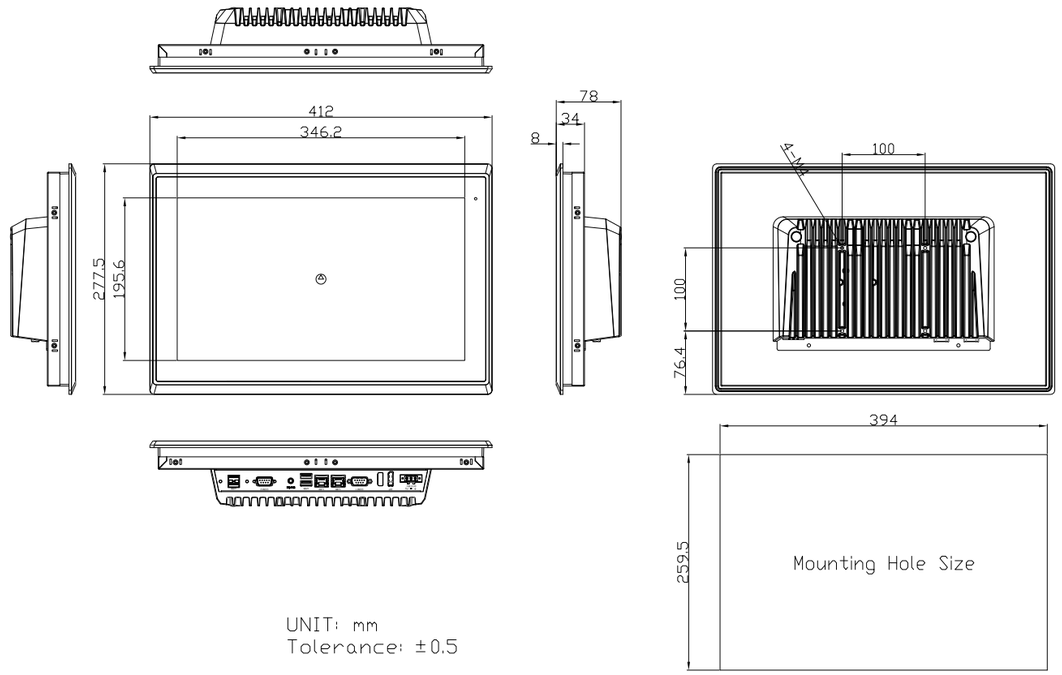

Mechanical	
Construction	Aluminum Die-casting Chassis
Mounting	Panel Mount, VESA 100 x 100
IP Rating	IP66 Compliant Front Bezel
Dimensions (WxHxD)	412 x 277.5 x 78 mm
Net Weight	4.2 kg

Environmental	
Operating Temperature	-20~60˚C
Storage Temperature	-30~70˚C
Humidity	10 to 95%@ 40˚C, non-condensing
Certificate	CE/FCC Class A/ UL

Operating System Support

Windows 10 IoT Enterprise 2021 LTSC
Windows 11 (21H2) or later
Linux 18.04 or later

Ordering Information

ARCHMI-S-816BP	15.6" FHD fanless HMI barebone with Intel Celeron J6412 (2.0 GHz) CPU, 1 x DDR4 slot, Projected Capacitive touch, 9~36VDC input with adapter, Aluminum chassis.
ARCHMI-S-816BR	15.6" FHD fanless HMI barebone with Intel Celeron J6412 (2.0 GHz) CPU, 1 x DDR4 slot, Resistive touch screen, 9~36VDC input with adapter, Aluminum chassis.
ARCHMI-S-816BPH	15.6" high brightness FHD fanless HMI barebone with Intel Celeron J6412 (2.0 GHz) CPU, 1 x DDR4 slot, Projected Capacitive touch, 9~36VDC input with adapter, Aluminum chassis.
ARCHMI-S-816BRH	15.6" high brightness FHD fanless HMI barebone with Intel Celeron J6412 (2.0 GHz) CPU, 1 x DDR4 slot, Resistive touch screen, 9~36VDC input with adapter, Aluminum chassis.

V 1.4

All specifications and photos are subject to change without notice.
All specifications and photos are subject to change without notice.
HMI Controller